MISC	TS421 TS426 S490,TS439 TS440 TS422 TS423 TS424 TS425 TS428 TS429÷431 TS432 TS433 S403 D464,465,TS436 TS445,446,D462 D468,469 TS437,438
MISC	TS447 D471–473 TS448 TS449 D474–476 TS450 TS451 D476,477 D466 TS441÷443 TS444 S491 S492,493 S405,406 TS455,456 D470 D481 D482,480 D483 VL408–410 S401 VL411
C	500 501 508 502 504 506 503 505 511 512 513 514 515 516 518 517 514 522 532 525 529÷531 528 534 535 538,571 539 537 544 545 543 540÷542
C	575 576 577 578 579 580 581 552 553 555 563 562 561 560 564 565 568 566 557 586 587 586 550 523 551 528 559 527 572,589 590
R	600 416 602 601 603–608 417 613 609–612 614 615 621 622 623 624 625 626 634 627÷629 605 648 647 646 636 650 667 657÷666 669 670 672 673 671 731 732 733,676–681 734 682–688 689–693
R	756 757 758 760 759 761 631 632 633 630 712 713 714 643 644 645 668 651 649 700 701 735 736
R	738 739 740741 742–744 746 745 747 748 749 752 754 753 751 755 702–706 699 718–725 709 707 711 710 727 728 726 729 730 763–766 767 637 750 647 762

www.mfbservice.nl
www.mfbfreaks.nl

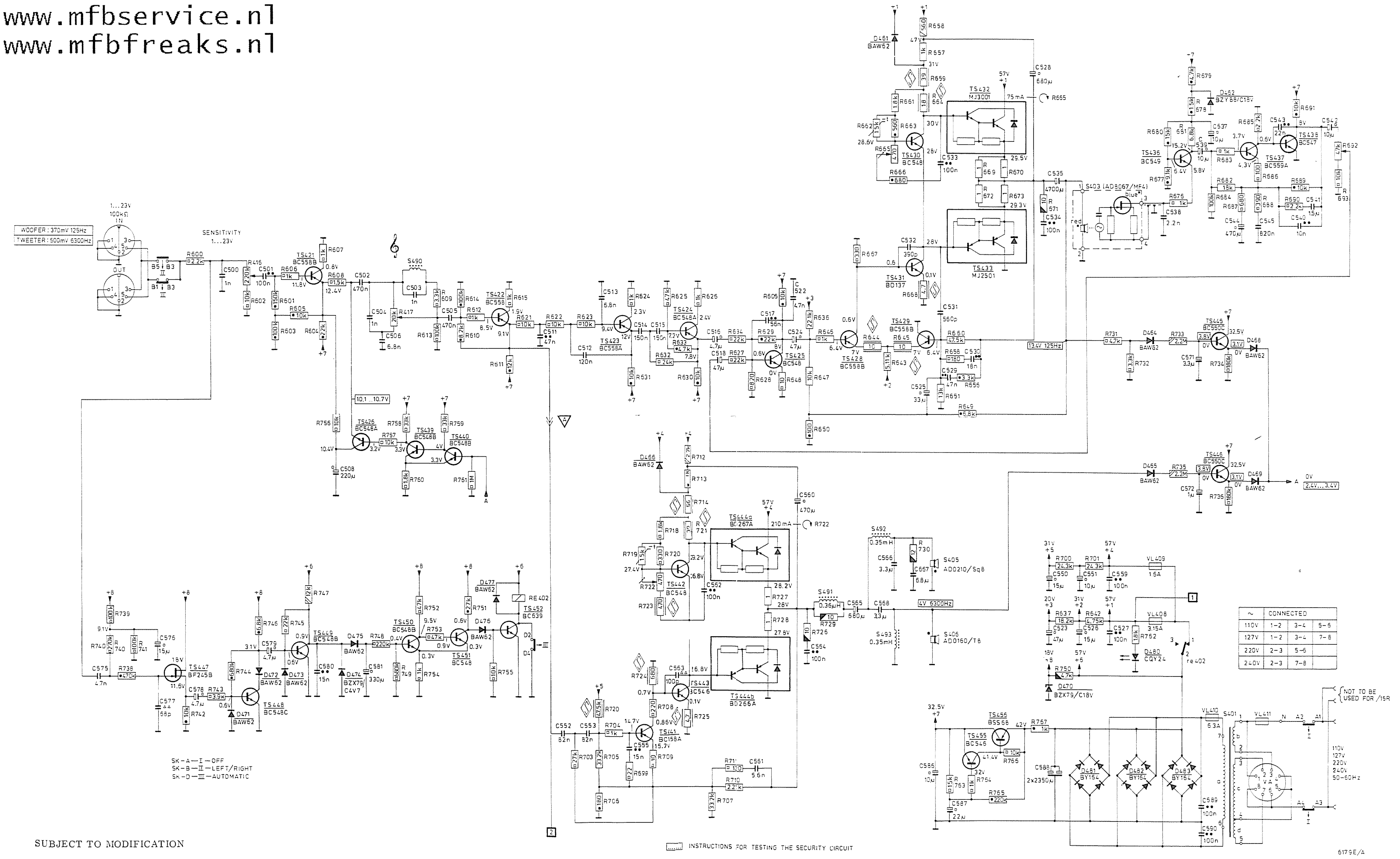

SUBJECT TO MODIFICATION

4822 725 15822

CS53939